# SERVO SYSTEMS CO.

## Carson Mfg. Gearheads
## Size 17 Series Planetary Dimensions
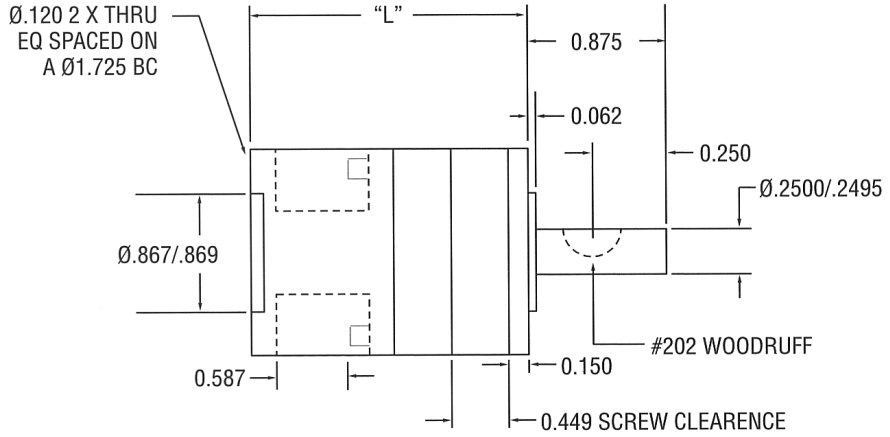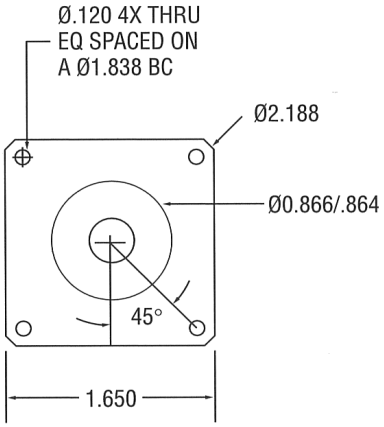
**DIMENSION "L"**
Single Stage (4:1 to 10:1) = 2.17± .015
Double Stage (16:1 to 100:1) = 2.78 ± .015