S2LYP166

TOL UNLESS SPEC.
2 PLC INCH DEC. = ±.06" [1.5mm] ANGLES ±0.5°

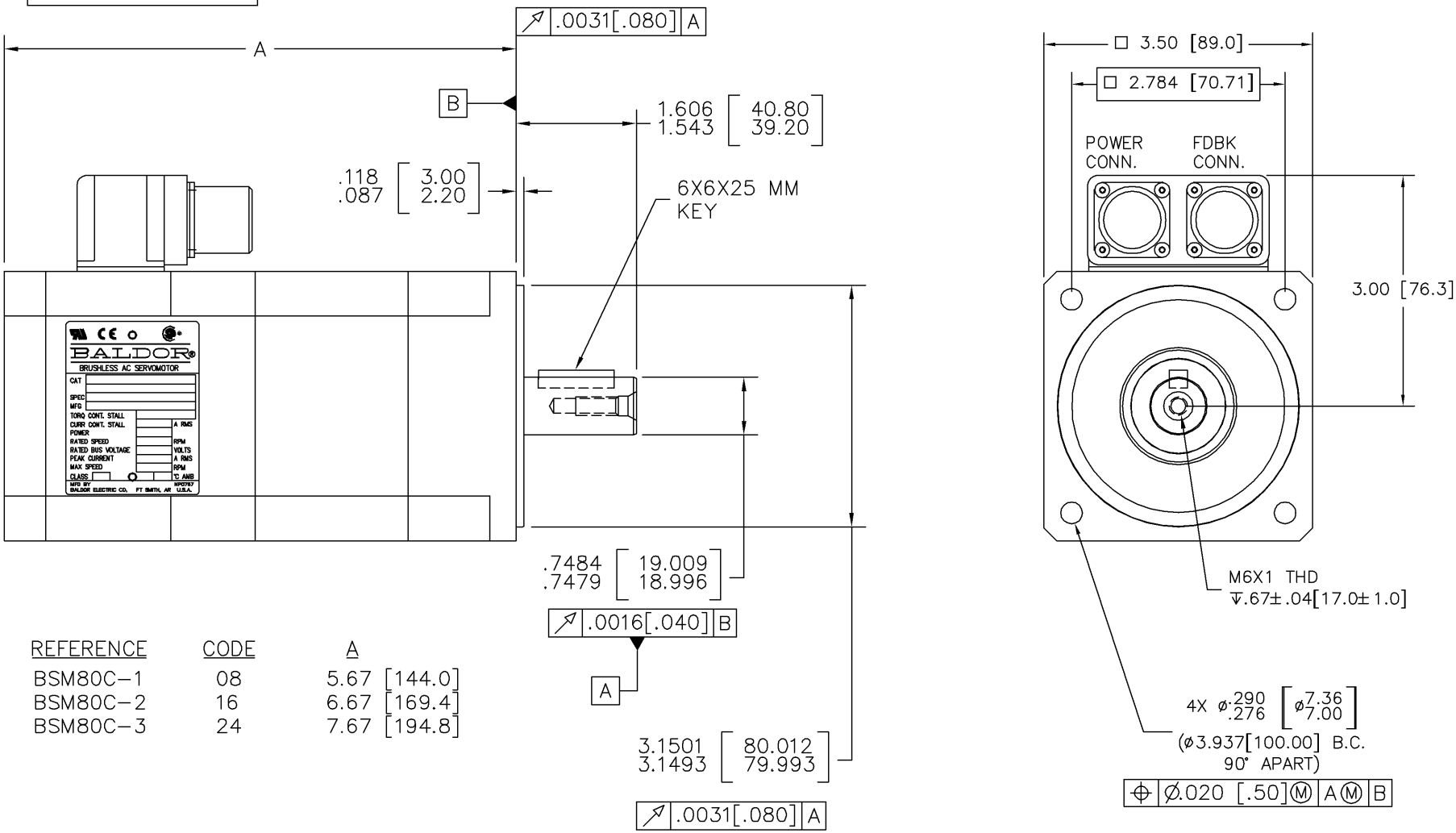

REFERENCE	CODE	A
BSM80C–1	08	5.67 [144.0]
BSM80C–2	16	6.67 [169.4]
BSM80C–3	24	7.67 [194.8]

CUSTOMER IS RESPONSIBLE FOR DETERMINING THAT MOTOR PERFORMANCE IS SUITABLE IN THE APPLICATION.

REV. DESC: UPDATED TO PRODUTION			
REV. LTR: B	BY: FN	REVISED: 15:23:08 03/11/2003	TDR: 296970
S2LYP166		FILE: AAA00080465	REF: S2LYP166
		MTL: –	

BALDOR ELECTRIC Co.

BSM80C, D56M19D100, RESOLVER, RING MAGNET

S2LYP166